[illegible]

INTRODUCE

[illegible] Foshan DESSION Packaging Machinery Co., Ltd. [illegible].

APPLICATION SCENARIOS

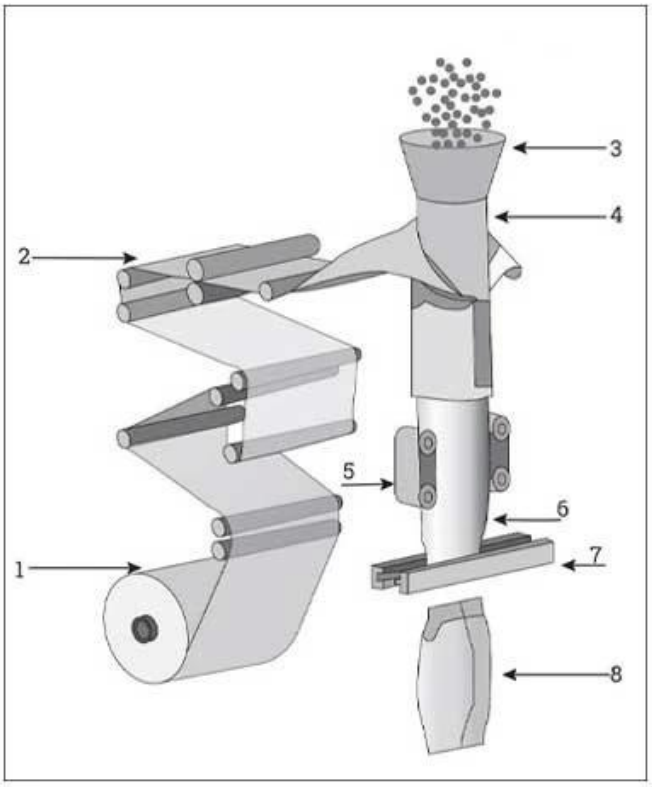

MACHINE ADVANTAGES

1. [illegible] PLC [illegible]

2. [illegible]

[illegible]

[illegible] :[illegible] .3

[illegible]

[illegible] .4

[illegible] .[illegible] .[illegible]

[illegible] .5

[illegible] 304 [illegible].

CONTACT NOW

DETAIL

TOUCH SCREEN

A

The touch screen can store parameters and adjust them at will, which is simple and convenient

B

Z TYPE HOIST

Automatic product loading, with built-in protective cover, making it more convenient

ROLL FILM

C

Automatic film rolling, smooth film pulling without jamming, etc.

D

MEASURING CUP

The weight can be set, freely adjusted, accurate measurement, high precision

BAG FORMER

E

Automatic bag making, lapel structure, smooth lapel, intelligent bag making

F

HEAT SEAL CUT

Heat sealing and cutting, sealing can be customized according to needs.

CONTACT NOW

COMPANY PROFILE

FOSHAN DESSION PACKAGING MACHINERY CO., LTD.

Foshan Dession Packaging Machinry o, Ltd. is ocated in China Machinery Center, Nanhai District,-Foshan city, Dession is a collection of research and-development,manufacturing, ales and ater-sales service in one of the high-tech enterprises, It has the self-import and export rights.DE newsleter focusing orproduction and research and development, all kinds of bag packaging machine, flling machine, and the research and development and manufacture oiautomatic packapine line.with superior performance advanced technoley,easy operation. easy maintenance.safe, durable widely used in puffed food. snacfood,frozen food, agricultural and sideline products, medicine, chemical prodiand otherfields-to meetthe needs of customers

9000 Square Meters of Factory Buildings

15Years Focus on packaging machinery

More than 80 Technicians and employees

More than 100 Packing machine modle

WORKSHOP DIAGRAM DISPLAY

FILLING MACHINE WORKSHOP

LARGE VERTICAL WORKSHOP

PILLOW MACHINE WORKSHOP

SMALL VERTICAL WORKSHOP

CARTONING MACHINE WORKSHOP

MULTI-TRAIN WORKSHOP

CONTACT NOW

CERTIFICATE DISPLAY

it owns more than 20 authorized intelectual property rights and has passed ISO9001 cetifcation everv vear.

Certificate of Honor

Patent certificate

‹ CUSTOMER TESTIMONIALS ›

True praise and good quality are all based on customer needs

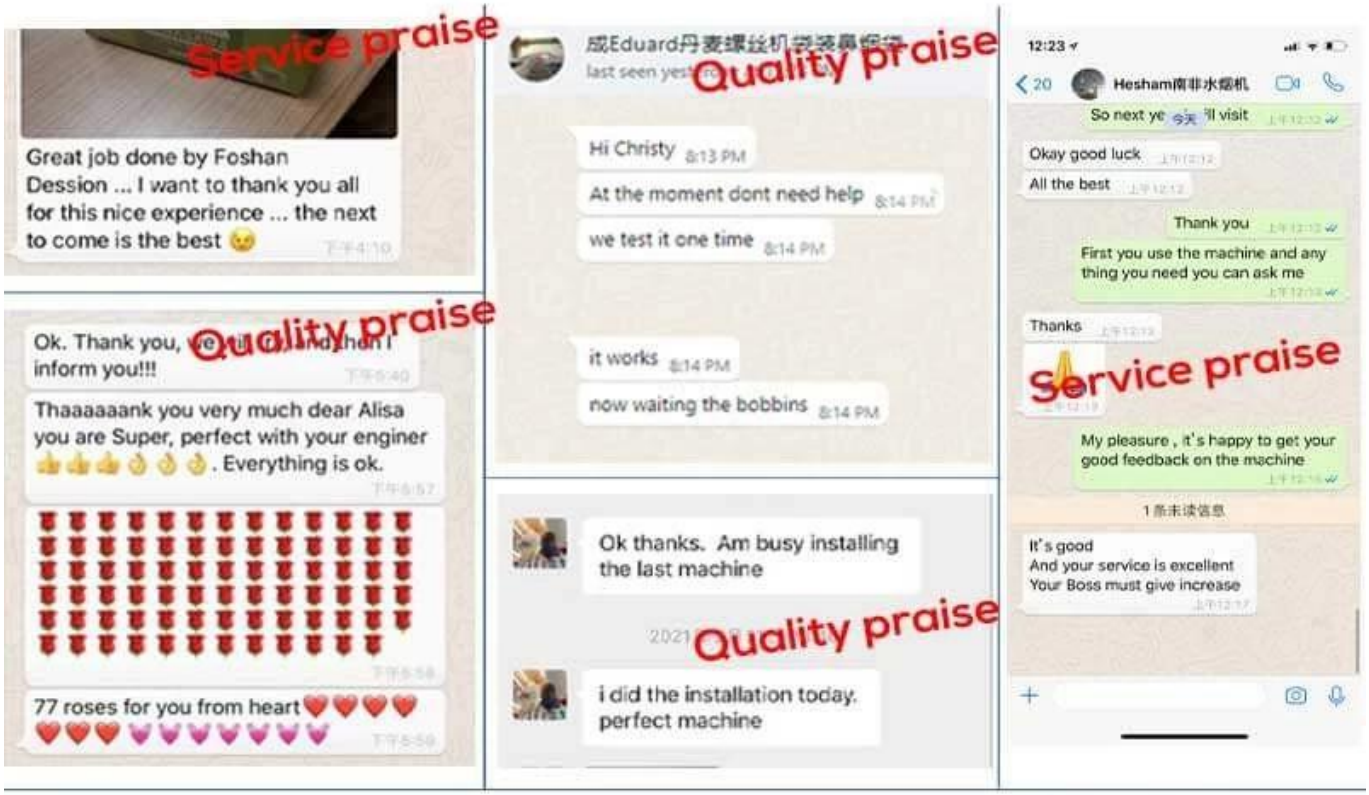

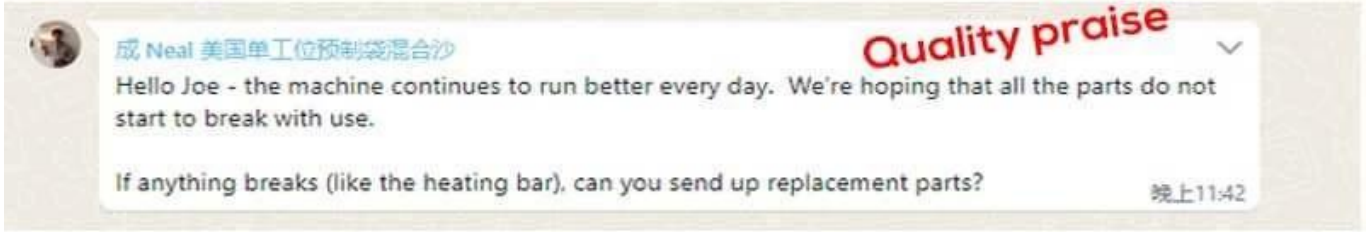

‹EXHIBITIONS & CUSTOMER VISITS›

International exhibition

Customer visit

CONTACT NOW

OUR SERVICE

Worry Free After Sale

Professional after-sales team with 10 years of experience
24-hour online after-sales
Professional technical team, on-site installation service
on-site debugging training

□□□□□ □□□□□ □□□□ □□ □□□□ □□ □□□□□□ □□□□□□□□ □□□□□ □□□ □□ □□□□ □□□□ □□ □□□□ □□□□□□ □□□□ □□□□□ □□ □□□□□ □□□
□□□□□□□□ □□□□□□□□□ □□□□□□□ □□□□□□□□ □□□ □□□□□ □□□ □□□□□ □□□□□ □□ □□□□□□ □□□ □□□□□
□□ □□□□□□□ □□□□□ □□□□□ □□□ □□□□□□ □□□□□□□ □□□ □□□□□ □□ □□□□ □□□□ □□□ □□□□□□□ □□□□□□ □□□ □□□□□ □□□□□ □□□□□ □□□□□ □□□□□□ □□□□□□□□ □□□□□□□ □□□□□ □□ □□□□□□ □□ □□□□ □□□□□□□□ □□□□□ □□□ □□ :□□□□□□) □□□□□□ □□□ □□□□□□□ □□□□□□□ □□ □□□□□□ □□□ □□□□□ □□□ □□□□ □□□□□□□□ □□□□□□ □□□□□□□□ □□□□□.)

□□ □□ □□□□□ □□ □□□□ □□□□ □□ □□□□ □□□ 30-15 □□□□ □□□□□□□ □□□□□ □□□□□ □□□□□□ □□□□□□ □□□ □□□□□□ □□□□□□ □□□□ (DHL □□□ □□□ □□□)

□□□□□□□□□□

□□□□□ □□□ □□ .1□

A1: □□□□□□□ □□□□□ □□□□□□□□ □□□□□□□ □□ □□□□ □□□ □□□□□ □□□□ □□□ □□□□ □□ □□□□□□□ □□□□□ □□ □□□□□□ □□□□□ □□ □□□ □□□□□ □□□□ □□□□□□.

□□□□□□□□□□ □□□□ □□ □□□□ .2□

□□□□□□ □□□□□□□□ □□□□□□□ □□□□□ □□□□□□ □□□□□□ □□□□ □□□□□□□ □□□□ :2 □
□□□□□□□□ □□□□□□□□□□ □□□□□□□□ □□□□□□□□ □□□□ □□□□□□□□ □□□□□ □□□
□□□□□□□□ □□□□ □□□□ □□□□□.

□□□□□□ □□ □□□□ .3□

A3: □□□□□□□ □□□□□□ □□□□□□□ □□□□□□ □□□□□□□□ □□□□□ □□□□□ □□□□ □□□.

□□□□□□□ □□□ □□□□□ .4 □

A4: □□□□□□□□□□ □□□□□□ □□□ □□□□ □□ □□□□□□□□□ □□□ □□□□□□□ □□□□
□□□ □□□ □□□ □□□□□□□□ □□□□□□□□□□ □□□□□□ □□□□ □□□□ □□□□□ □□□□□□□
□□ □□□□□ .□□□□□□.

□□□□□□□□□ □□□□ □□□□□ □□□□□ □□□□□□ □□ .5□

□□□□□□□ □□□□□□ □□□□□□□□□ □□□□□ □□□□□□□ □□□□□□ □□□□ !□□□ :5□.

□ □□ □□□□□ □□□□□□□ □□□ □□ □□□□□ □□ □□ .6□

A6: □□ .□□□□□□□ □□ □□□□□□ □□□□□□□ □□□□ □□□ □□□□ 10 □□□ 5 □□ □□□ □□□□
□□□□□□□ □□ □□□□□□ □□□□□□□ □□□ □□ □□□ □□□□□ 30-15.