Automatic n95 mask machine n95 mask machine fully automatic face mask n95 machine

N95 Fully automatic Mask machine

Servo motor drive, touch screen operation

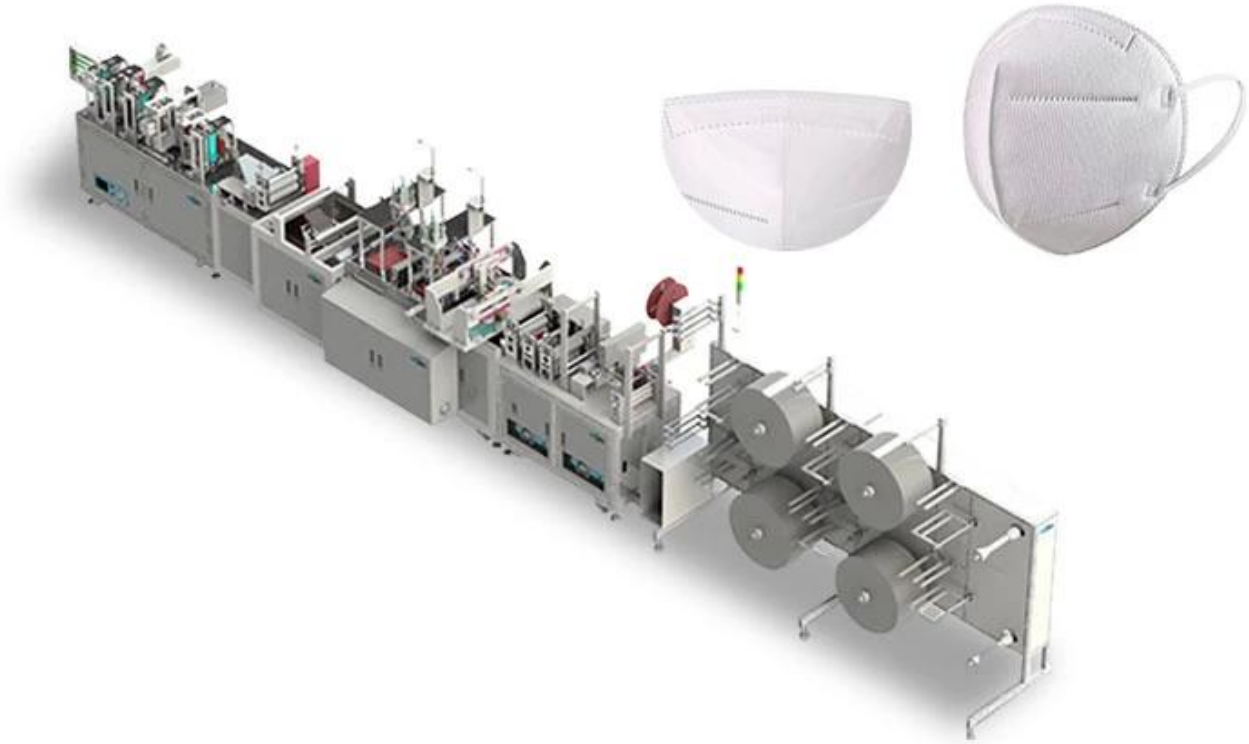

50-60 pieces per minute

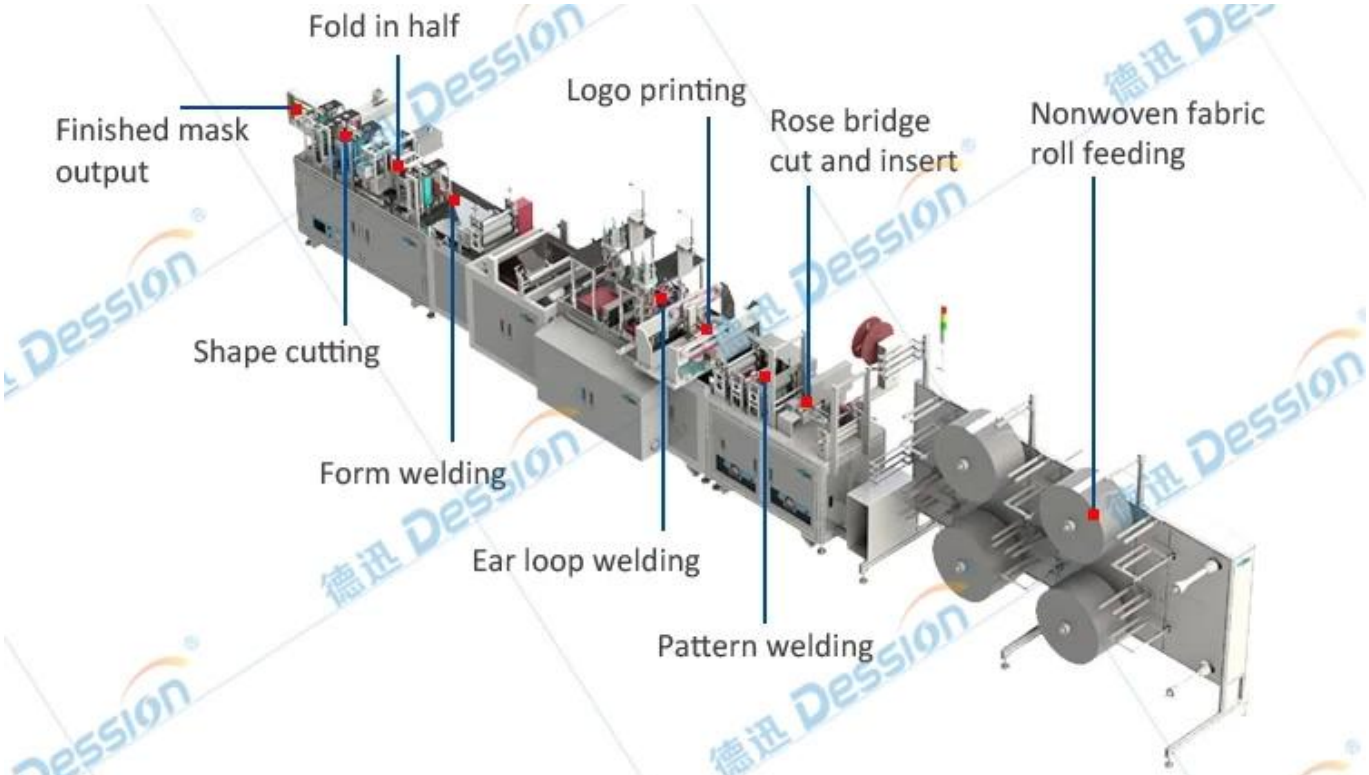
Fold in half
Finished mask output
Logo printing
Rose bridge cut and insert
Nonwoven fabric roll feeding
Shape cutting
Form welding
Ear loop welding
Pattern welding

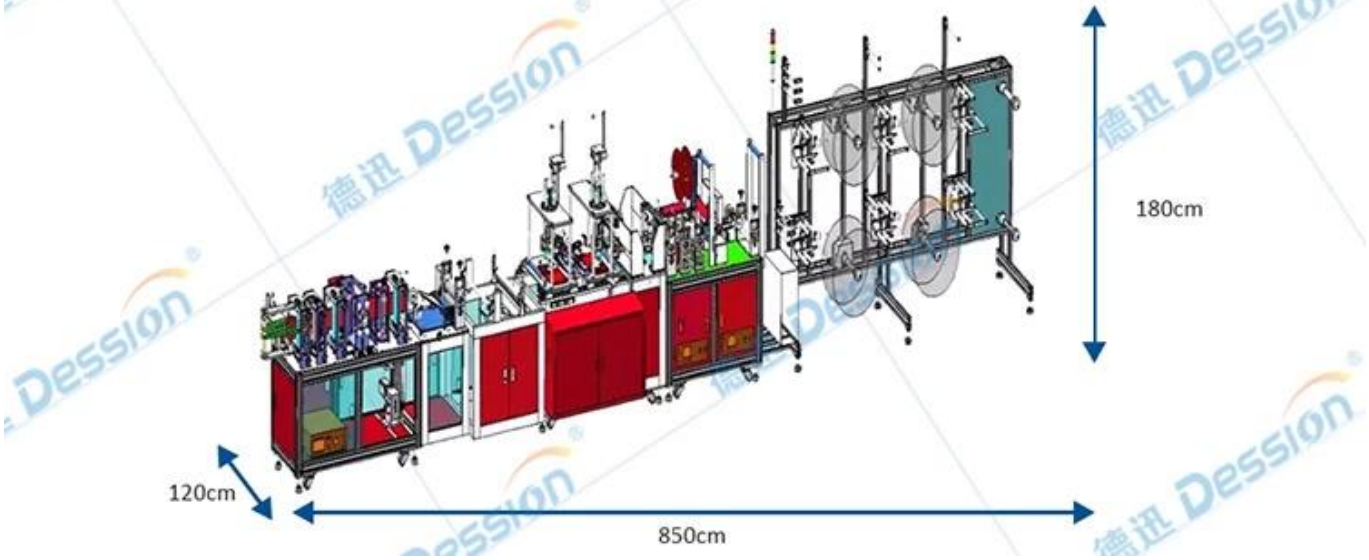
180cm
120cm
850cm

Nonwoven feeding structure

Nose bridge inserting

Pattern welding

Ear loop welding

Mask folding

Mask cutting & output

Material feeding > Rose bridge insert > Pattern welding

V

Mask folding < Ear loop welding < Logo printing <

V

Form welding > Shape cutting > Finished mask output

Contact us

Whatsapp +86 17328052077

Skype +86 17328052077

Wechat +86 17328052077

Mobile +86 17328052077

Email: dession-win@fsdspm.com

Win Tan