□□ CE □□ □□ □□ □□ □□ □□ □□ □□

Colgate MFP
Colgate MFP
Colgate MFP
Colgate
Colgate
德迅 Dession

□□ □□□

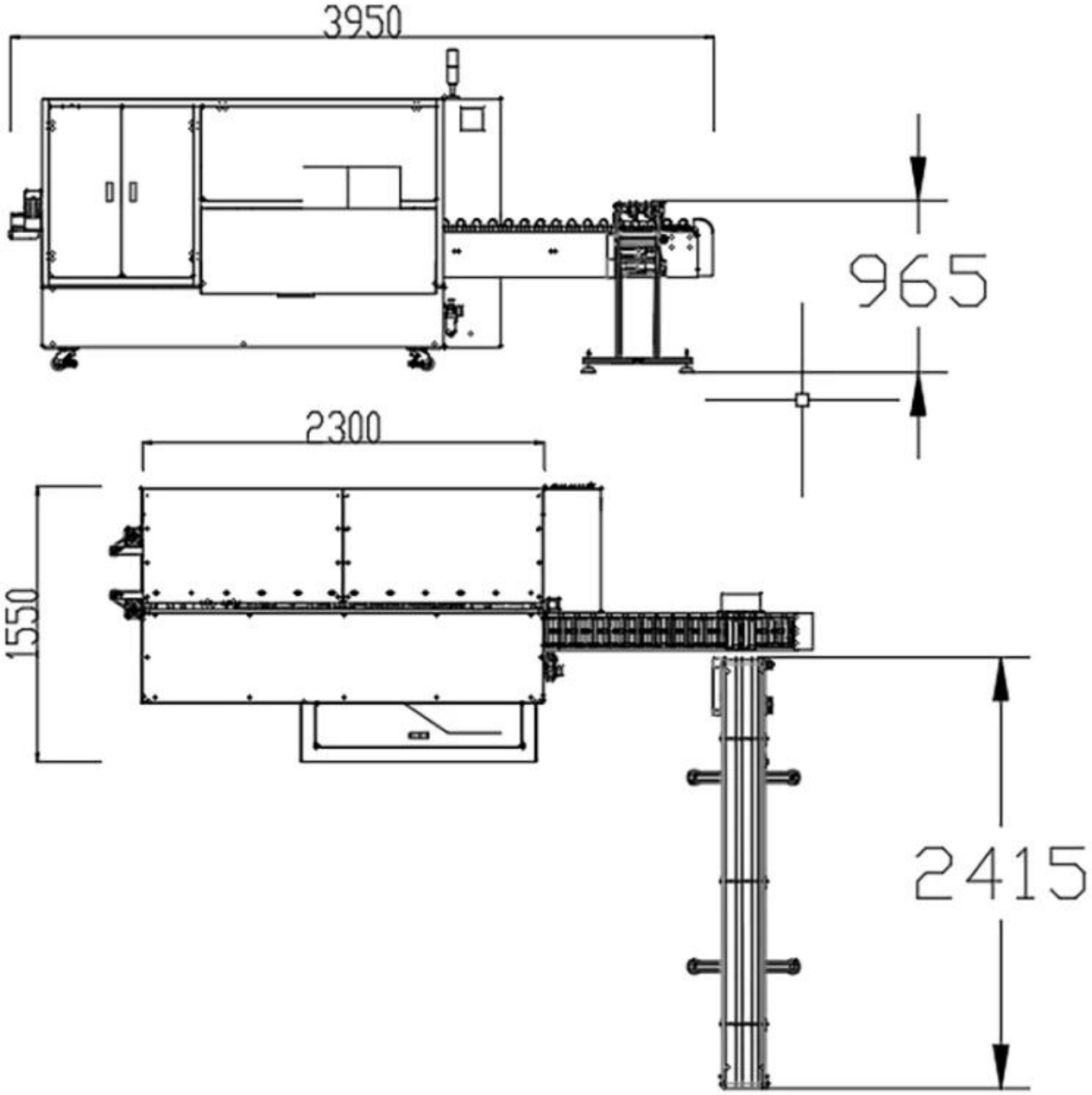
3950
965
2300
1550
2415

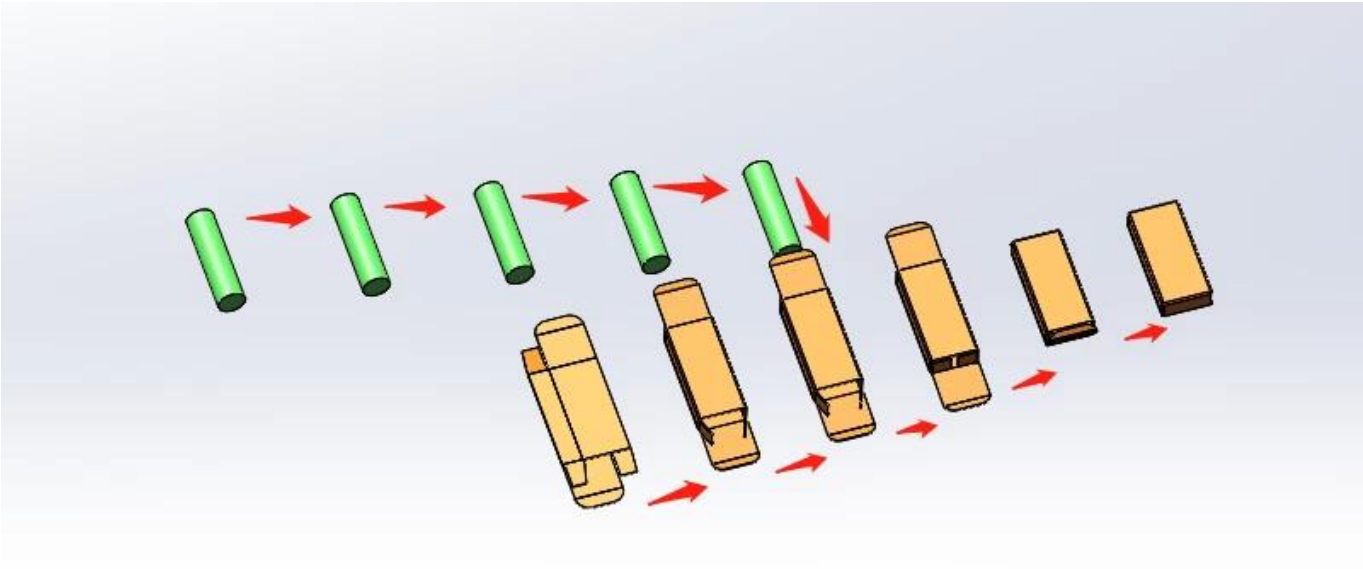

Contact us

□□□□□□

□□ □□

□ □□□ □□, □□ □ □□□ □□□□ PLC □□ □□□ □□□□□. LT□ □□ □□ □□ □ □□□□ □□ □□□ □□ □□□ □□□□□. □ □□□ □□□ □□ □□ □□ □ □□□ □□ □□ □ □□ □□□ □□□□ □□ □□□ □□ 100-150 □□ □□□ □□□ □ □□□□. LT□ □□□□ □□□ □□ □□□ □□□ □□□ □□□□. □□□ □ □ □□□ □ □□□□!

□□ □□

□□:	DS-GS150
□□ □□ □□:	L 110-200 * W 30-70 * H 18-45mm (□□□ □□ □□ □□ □□)
□□ □□ □□ □□:	300g/m2 ≤ □□□ □□:350g/m2 ≤ 450g/m2
□□ □□ □□:	□□ □□□ □□□ 0.4mm □□□□ □□ □□ □□□ □□□□.
□□ □□:	100-150□□/□
□ □□:	3KW
□□ □□:	□ L3950 * W1550 * H1730mm
□□ □□:	□ 2T

Company profile

Foshan Dession packaging machinery Co., Ltd. is located in Nanhai District, Foshan city, China machinery center, is a collection of research and development, manufacturing, sales and after-sales service in one of the high-tech enterprises, with self-import and export rights. DE newsletter focusing on production and research and development, all kinds of bag packaging machine, filling machine, and the research and development and manufacture of automatic packaging line, with superior performance, advanced technology, easy operation, easy maintenance, safe, durable, widely used in puffed food, snack food, frozen food, agricultural and sideline products, medicine, chemical products, metal products and other fields, to meet the needs of customers.

EXHIBITIONS

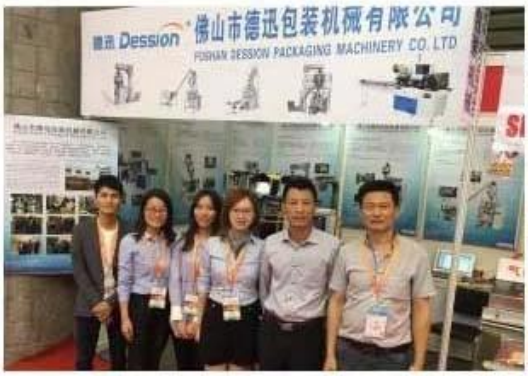

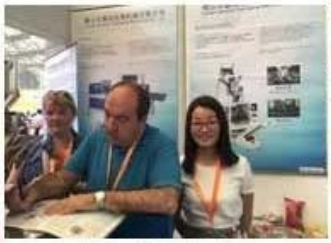

Contact us

Our Advantage

On-site installation, commissioning and training

Specially customized based on actual situation

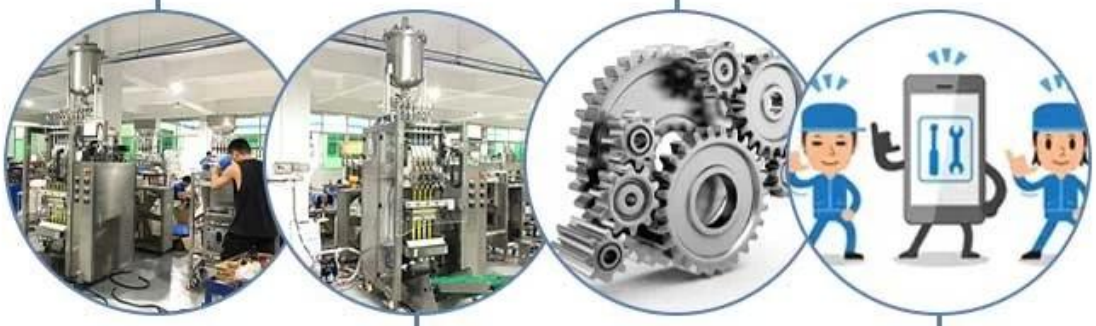

High automation, simple operation and labor saving

Life long technical service support

Dession□□ □□□□ □□□ □□ □□□□ □□□□ □□ □□ □□□□.

□□□ □□□ □□□ □□□□ □□□□□ □□ □□□ □□□□ □□□□□.
□□□ □□□ □□□ □□□□ □□ □□ □□ □ □□ □□□□ □□ □□ □ □□□ □□□□□ □□□□ □□□□.
□□□ □□ □ □□ □□ □□ □□□□ □□□□ □□□□□.
□□□ □□□ □□□□ □□ □□□ □□□ □ □□□ □□□ □□□□□□.

PACKAGING SHIPPING
NORTH AMERICA
ASIA
AFRICA
SOUTH AMERICA

□□□ □□□ □□ □□□ □□□ □□ 15-30 □, □□, □□ □□ □□□□□ (DHL □)

AFTER-SALES
SERVICE

1. □□ □□□ □□□ □□ □□ □□ □□□ □□ □□□□□ □□□□ □□□□ □□□ □ □□□□.
2. □□□ □□, □□, □□, □□ □□□ □□ □□□□ □□ □□□□□ □□□□□.
3. □□□ □□□ □ □□□ □□□□ □□□□ □□□ □□ □□ □□ □□□□ □□□ □□□□ □□ □□□ □□□ □ □□□□.

(□□: □□□ □□□□ □□ □□□ □□ □□ □□□□ □□□□□ □□ □□□□ □□□ □□ □□□□ □□□ □□□ □□□ □□□□□.)